MEMXPRO

Make it Possible

Product Specification

MEMXPRO 2.5” SSD EB31 Series

Revision V2.0

Form Factor

- 2.5” SSD (SFF-8201)

NAND Flash Type

- MLC (StrongMLC Mode)

Capacities

- 8GB, 16GB, 32GB, 64GB, 128GB

Performance

- Sequential Read (max): 514 MB/sec
- Sequential write (max): 421 MB/sec
- Random Read (max): 33200 IOPS
- Random write (max): 67000 IOPS

Supply Voltage

- 5V±5%

Power Consumption

- Idle mode: 0.4W (5Vx80mA)
- Active mode(max): 2.75W (5Vx550mA)

Temperature Ranges

Operating:

- Standard: 0°C~+70°C
- Extended: -25°C~+85°C
- Industrial: -40°C~+85°C

Storage:

- -55°C to 95°C

Shock & Vibration

- Shock: 1500G@0.5ms
- Vibration: 20G (7~2KHz)

Mean Time Between Failures (MTBF)

- > 3,000,000 hours

Compatibility

- Serial ATA Revision 3.1 specifications
- SATA3 (6Gb/s) interface
- Backward compatible with SATA1 (1.5Gb/s) and SATA2 (3Gb/s) interface
- ATA/ATAPI-8 and ACS-2 command set
- Data set management command (TRIM)
- Native Command Queuing (NCQ) command set
- SATA Device Sleep (DEVSLP)
- Self-Monitoring, Analysis, and Reporting Technology (S.M.A.R.T)

Data Protection and Reliability

- Built-in hardware ECC, enabling up to 66-bit correction per 1KB
- Supports ATA8 security feature set
- Internal data shaping technique increases data endurance
- Global wear leveling algorithm

Certificates and Declarations

- CE
- FCC
- RoHS
- REACH

Revision History

Version	Description	Date
1.0	Initial release	2016/12/28
1.2	Update RoHS declaration of conformity & PN naming guide	2018/01/11
2.0	Update Model Name & PN and add flash management	2018/09/20

Contents

1 Overview

1.1 Introduction

MEMXPRO 2.5” SSD EB31 series is an extended endurance SSD solution complaint with the SFF-8201 specification. For the consideration of adequate storage capacity and aluminum extrusion case, MEMXPRO 2.5" SSD EB31 series is one of the lowest SSD price tags on the market, striking the right balance between cost-effectiveness and reliable performance. As compared to standard SATA HDDs, 2.5” SSD EB31 series offers high I/O and throughput performance, reduces operation system boot time, lower power consumption, and enhances reliability. The drive supports ECC engine, device sleep mode, wear leveling, flash block management, TRIM, and S.M.A.R.T. for industrial and embedded computing applications.

1.2 Block Diagram

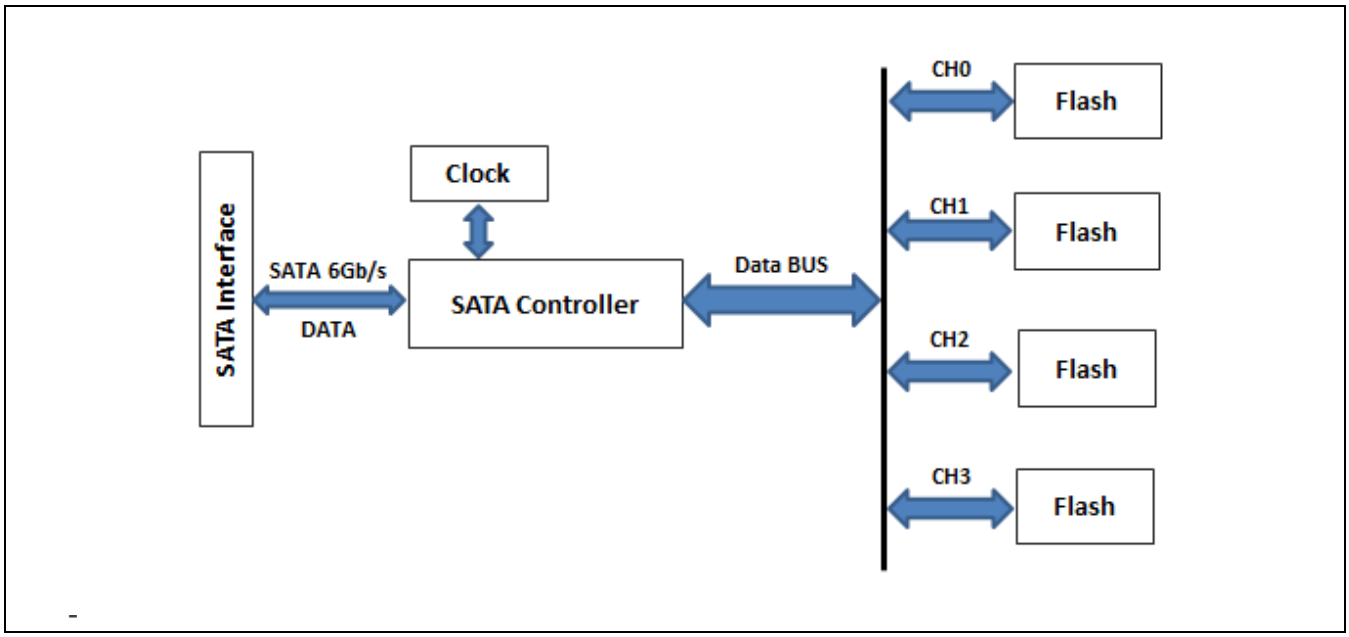

-

2 Product Specification

2.1 Capacity

Raw Capacity	Cylinder	Head	Sector	User Capacity	LBA*
8GB	15525	16	63	7.46GB	15649200
16GB	16383	16	63	14.91GB	31277232
32GB	16383	16	63	29.82GB	62533296
64GB	16383	16	63	59.63GB	125045424
128GB	16383	16	63	119.24GB	250069680

Note: *One LBA = 512 Bytes.

2.2 Performance

Brand	Raw Capacity	Sequential Read MB/sec (Max.)	Sequential Write MB/sec (Max.)	Random Read IOPS (4KB QD32)	Random Write IOPS (4KB QD32)
Micron	8GB	115	33	4.75K	4.75K
	16GB	230	73	9.25K	14.5K
	32GB	465	141	18.5K	31K
Toshiba	32GB	354	154	16.45K	26.7K
	64GB	515	304	25.7K	56.2K
	128GB	514	421	33.2K	67K

Note: Test tool: CrystalDiskMark 3.03
* Sequential performance is measured by file size 1000MB.
**Random performance is measured by 4KB Queue Depth 32.

2.3 Power Characteristics

Supply Voltage	Parameter Specification
Input Voltage	5V±5%
Power Consumption	**Specification (W)**
Idle (max.)	0.4W (5Vx80mA)
Active (max.)	2.75W (5Vx550mA)

2.4 Environmental Conditions

Environment	Specification
Storage Temperature	-55°C~+95°C
Operating Temperature	0°C+70°C (Standard) ; -25°C~+85°C (Extended); -40°C~+85°C (Industrial)
Vibration*	20G (7~2K Hz)
Shock**	1500G@0.5ms
Humidity	Relative Humidity: 10-95%, non-condensing
MTBF***	>3,000,000 hours

Note:*Vibration reference to IEC 60068-2-6 testing standard.
**Shock reference to IEC 60068-2-27 testing standard.
***MTBF prediction is based on Telcordia SR-332.

2.5 Total Bytes Written

Capacity	Endurance - TBW*
8GB	27TB
16GB	54TB
32GB	109TB
64GB	219TB
128GB	438TB

Note:* TBW calculation is tested upon JEDEC JESD218 & 219A standards.

3 Mechanical Information

3.1 Dimensions

Form Factor	Length (mm)	Width (mm)	Height (mm)
2.5” SSD (SFF-8201)	100.00±0.25	69.85±0.25	6.80±0.20

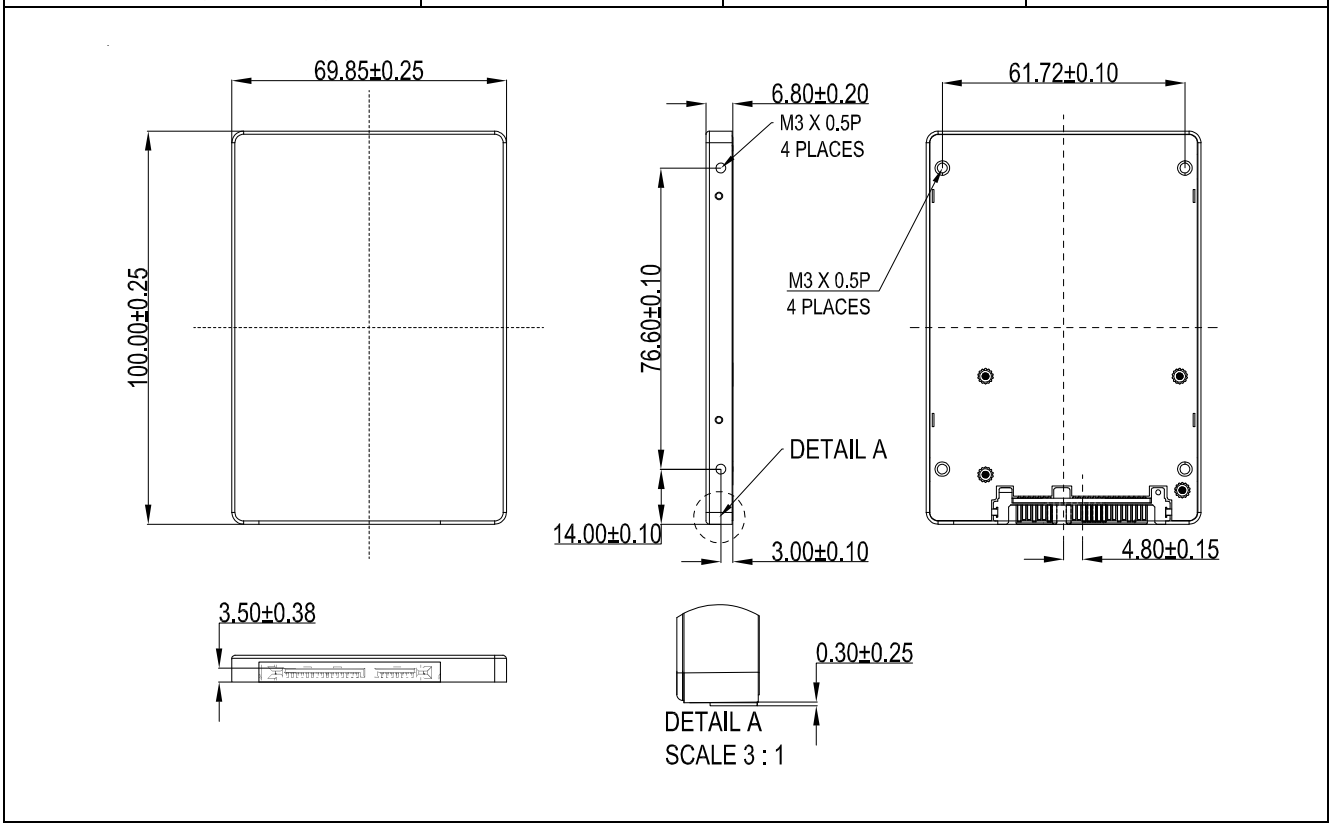

Notes: All dimensions are in millimeters

3.2 Connector Pin Signal Location

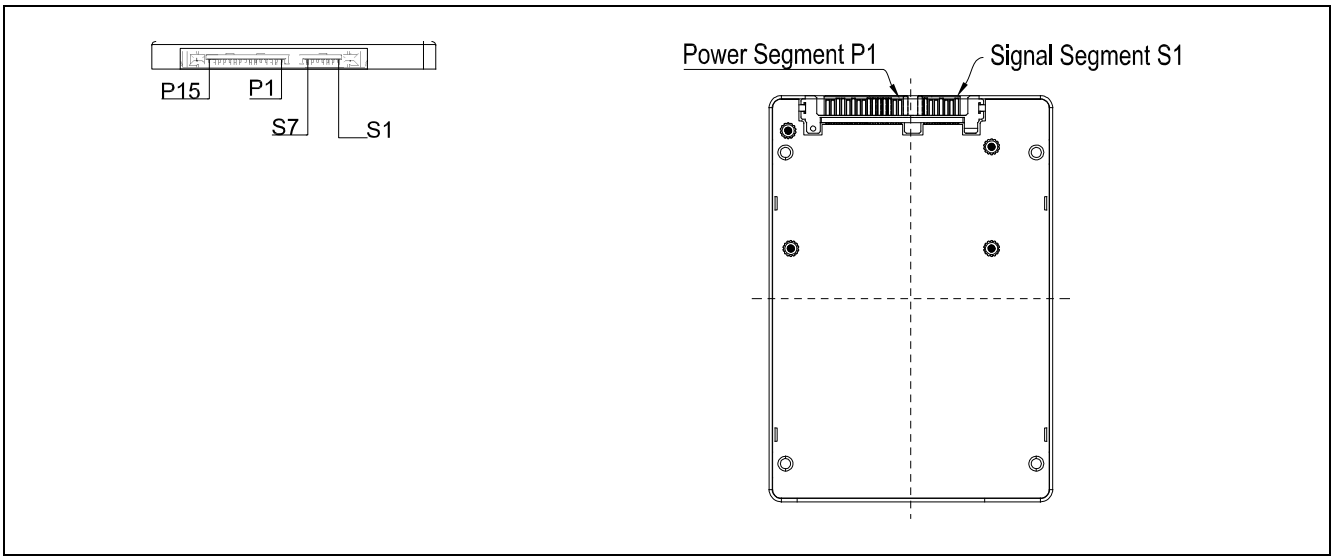

3.3 Connector Pin Signal Definitions

PIN #	Function
S1	Ground
S2	Host side A+ (TXP) / Device side B+(RXP)
S3	Host side A- (TXN) / Device side B-(RXN)
S4	Ground
S5	Host side B- (RXN) / Device side A-(TXN)
S6	Host side B+ (RXP) / Device side A+(TXP)
S7	Ground

P1	NC
P2	NC
P3	DEVSLP
P4	Ground
P5	Ground
P6	Ground
P7	5V
P8	5V
P9	5V
P10	Ground
P11	DAS/ DSS
P12	Ground
P13	NC
P14	NC
P15	NC

4 Flash Management

4.1 Error Detection and Correction

2.5” SSD EB31 series implements hardware BCH Error Correction Code (ECC) capable of correcting errors up to 66-bit per 1KB.

4.2 Global Wear Leveling

Wear leveling is a process that helps reduce premature wear in NAND Flash storage devices. MEMXPRO SSD and flash drives incorporate global wear leveling for greater extended life of the SSD. Global wear leveling ensures SSD endurance and stability.

4.3 Bad Block Management

Bad block management is critical to improving NAND flash drive reliability and endurance. Unlike magnetic storage media, flash can't be overwritten at the byte level; all changes must be written to a new block and the data in the original block must be marked for deletion. A bad block is an area of storage media that is no longer reliable for storing and retrieving data because it has been physically damaged or corrupted. The bad blocks may be presented while the SSD is shipped from the factory with defective blocks that originated in the manufacturing process, or may develop after a certain number of program-erase cycles. The SSD implement Error Correct Code, bad blocks management and replacement, wear-leveling, and garbage collection to avoid data error occurred.

4.4 Garbage Collection/TRIM

Garbage collection is one technique to control flash storage write amplification where the number of actual writes exceeds the number of writes requested. It involves proactively consolidating data by freeing up blocks that were written to previously. These reallocated sectors can reduce the need to erase entire blocks of data for every write operation. SSD TRIM is an Advanced Technology Attachment (ATA) command that enables an operating system to inform a NAND flash SSD which data blocks it can erase because they are no longer in use. The use of TRIM can improve the Garbage Collection process, contributing to the performance of writing data to SSDs and longer SSD life. MEMXPRO SSD drives enables TRIM to make sure that SSD performance doesn’t degrade with use.

4.5 Current and Voltage Overload Protection

With built-in Over Current Protection (OCP) and Over Voltage Protection (OVP) ICs, the MEMXPRO’s SSDs are about to shut down power to protect data when encountering abnormal currents and voltages. The SSD recovers automatically when abnormal conditions are over.

4.6 SATA Power Management

SATA power saving modes:

- ACTIVE: PHY ready, full power, Tx & Rx on
- PARTIAL: Reduced power, resumes in under 10us (microseconds)
- SLUMBER: Reduces power, resumes in under 10ms (milliseconds)
- AUTO-SLUMBER: Automatic transition from partial to slumber.
- HIPM: Host-Initiated Power Management
- DIPM: Device-Initiated Power Management
- Device Sleep (DevSleep or DEVSLP): PHY powered down; power consumption ≤ 5mW; host assertion time ≤ 10ms; exit timeout from this state ≤20 ms (unless specified otherwise in SATA Identify Device Log).

5 Software Information

5.1 Software Function

- ATA Security
- S.M.A.R.T
- TRIM

5.2 SMART Attributes

The following table defines the vendor specific data in byte 2 to 361 of the 512-byte SMART data.

Attribute ID	Raw Attribute Value						Attribute Name
0x01	MSB	0	0	0	0	0	Read error rate
0x05	LSB	MSB	0	0	0	0	Reallocated sectors count
0x09	LSB			MSB	0	0	Reserved
0x0C	LSB			MSB	0	0	Power cycle count
0xA0	LSB			MSB	0	0	Uncorrectable sector count when read/write
0xA1	LSB	MSB	0	0	0	0	Number of valid spare block
0xA2	LSB	MSB	0	0	0	0	Number of cache data block
0xA3	LSB	MSB	0	0	0	0	Number of initial invalid block
0xA4	LSB			MSB	0	0	Total erase count
0xA5	LSB			MSB	0	0	Maximum erase count
0xA6	LSB			MSB	0	0	Minimum erase count
0xA7	LSB			MSB	0	0	Average erase count
0xC0	LSB			MSB	0	0	Power-off retract count
0xC2	MSB	0	0	0	0	0	Controlled temperature
0xC3	LSB			MSB	0	0	Hardware ECC recovered
0xC4	LSB			MSB	0	0	Reallocation event count
0xC7	LSB	MSB	0	0	0	0	Ultra DMA CRC error count

6 Certificates & Declarations

6.1 Device Certifications & Declarations

Certifications	Description
CE Compliant	In accordance with the provisions of the Electromagnetic Compatibility (EMC) Directive 2004/108/EC of the European Parliament and of the Council of 15 December 2004.
FCC Compliant	In accordance with FCC Regulations under Part 15 Subpart B Class B following the ANSI C63.4 procedure.
RoHS Compliant	Restriction of hazardous substance directive
REACH Compliant	Regulation of the European Union for hazard assessment of substances

7 Product Ordering Information

7.1 Part Number Naming Guide

1	2	3	4	5	6	7	8	9	10	11	12	13	14	15	16	17	xx
F	E	S	2	5	-	x	x	x	x	B	S	4	X	x	x	x	xx

1. Product Code
F: Flash

2. Product Series
E: Embedded

3-5 Form Factor
S25: SATA 2.5” SSD

7-9 Flash Capacity
08G: 8GB
16G: 16GB
32G: 32GB
64G: 64GB
A2G: 128GB

10. Flash Vendor
M: Micron
T: Toshiba

11. Flash Type
B: StrongMLC

12-14 Controller
S4X: SM2246XT

15. Channel Numbers
1:1
2:2
4:4

16. Operating Temperature
C: Standard 0°C to 70°C
E: Extended -25°C to 85°C
W: Industrial -40°C to 85°C

17. PCB Version

18. Special Function

19-22 Customization Code

7.2 Ordering Information

Capacity	Commercial Grade (0°C~70°C)	Extended Grade (-25°C~85°C)	Industrial Grade (-40°C~+85°C)
8GB	FES25-08GMBS4X1C1	FES25-08GMBS4X1E1	FES25-08GMBS4X1W1
16GB	FES25-16GMBS4X2C1	FES25-16GMBS4X2E1	FES25-16GMBS4X2W1
32GB	FES25-32GMBS4X4C1	FES25-32GMBS4X4E1	FES25-32GMBS4X4W1
32GB	FES25-32GTBS4X2C1	FES25-32GTBS4X2E1	FES25-32GTBS4X2W1
64GB	FES25-64GTBS4X4C1	FES25-64GTBS4X4E1	FES25-64GTBS4X4W1
128GB	FES25-A2GTBS4X4C1	FES25-A2GTBS4X4E1	FES25-A2GTBS4X4W1