MEMXPRO U.2 PCIe PT33 Series

10K endurance, high speed PCIe Gen3 x4

Industrial 3D TLC
10K P/E cycle

Features

- PCIe Gen3x4 U.2 with NVMe 1.3 supported
- Read/Write speeds of up to 2116/1340MB/s
- Random Performance of up to 188K/211K IOPS
- Industrial Micron 3D TLC, up to 10K P/E Cycles
- LDPC ECC for improved data integrity
- End-to-end data path protection with CRC parity, better safe and data guard features
- SLC cache with dynamic write acceleration
- Built-in OCP/OVP Protection

Specification

Product Model	U.2 PCIe PT33
Interface	PCIe Gen 3 X4
Form Factor	U.2
Controller	SMI SM2263EN
Flash Type	3D TLC (**Original** Micron B17, 10K P/E cycle)
Max. Channel	4
Density	128GB~1TB
Sequential R/W (MB/sec, max.)	2116/1340
Operating Temperature	0°C~+70°C/-25°C~+85°C/-40°C~+85°C
Max. Power Consumption	5.82W (12Vx485mA)
Dimension (L x W x H/mm)	100x70x9.3
Operating Voltage	12V±5%
Storage Temperature	-55°C~+95°C
Security*	AES 256-bit Encryption TCG Opal 2.0 compliant Built-in H/W SHA256 and TRNG
External DRAM Buffer	✓
Thermal Sensor	✓
NVMe 1.3	✓
Vibration	20G (7~2KHz)
Shock Resistance	1500G@0.5ms
MTBF	>3 million hours

*: The functions will be activated by specific firmware versions.

Dimensions

Preliminary v0.6

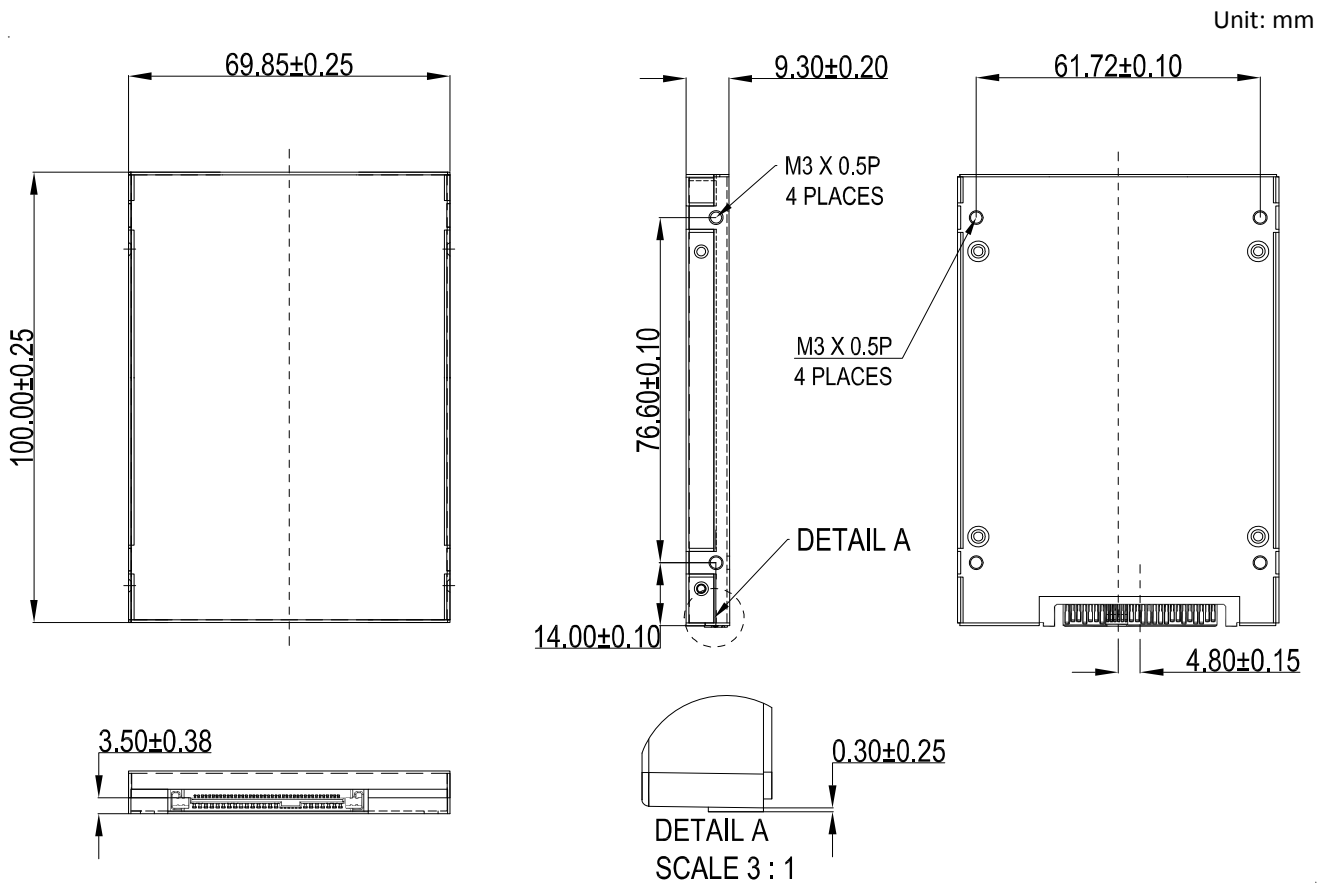

Ordering Information

Capacity	Commercial (0°C~70°C)	Extended (-25°C~+85°C)	Industrial (-40°C~+85°C)
128GB	FPU25-A2GMTS632C1	FPU25-A2GMTS632E1	FPU25-A2GMTS632W1
256GB	FPU25-B5GMTS634C1	FPU25-B5GMTS634E1	FPU25-B5GMTS634W1
512GB	FPU25-E1GMTS634C1	FPU25-E1GMTS634E1	FPU25-E1GMTS634W1
1TB	FPU25-010MTS634C1	FPU25-010MTS634E1	FPU25-010MTS634W1

Tip: End-to-end data path protection

MEMXPRO SSD controller solutions incorporate full data error detection with recovery engines to provide enhanced data integrity throughout the entire Host-to-NAND-to-Host data path.

The data recovery algorithm can effectively detect any error in the SSD data path, including hardware (i.e. ASIC) errors, firmware errors and memory errors arising in SRAM, DRAM or NAND.

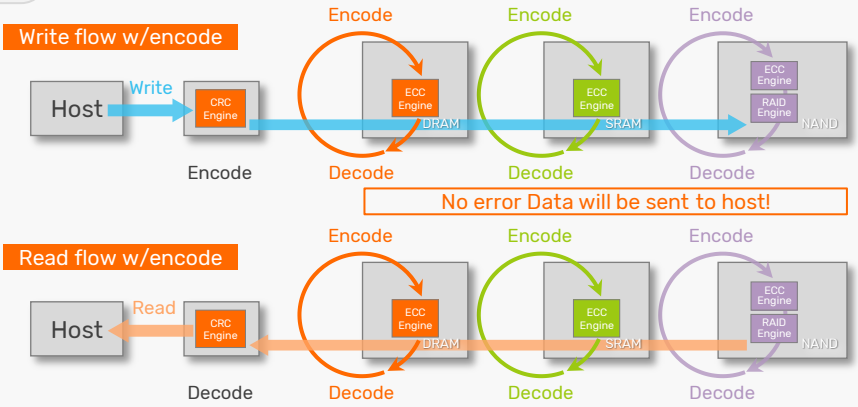

MEMXPRO Make it Possible

MEMXPRO Inc.
info@memxpro.com www.memxpro.com